THE ENVIRONMENT PARTNERSHIP

HULTON PARK
WESTHOUGHTON
BARN OWL MANAGEMENT STRATEGY

TEP
Genesis Centre
Birchwood Science Park
Warrington
WA3 7BH

Tel: 01925 844004
Email: tep@tep.uk.com
www.tep.uk.com

Offices in Warrington, Market Harborough, Gateshead, London and Cornwall

Document Title	Barn Owl Management Strategy
Prepared for	Peel holdings (Land & Property) Limited
Prepared by	TEP - Warrington
Document Ref	6741.04.001

Author	Lausanne Jenkins
Date	April 2019
Checked	David Sweeting
Approved	David Sweeting

Amendment History					
Version	Date	Modified by	Check / Approved by	Reason(s) issue	Status
1.0	22/12/17	LJ	DS	Original issue	Issued
2.0	24/04/19	RT	DS	Dates amended	Issued

CONTENTS PAGE

Executive Summary 1
1.0 Vision Statement 2
2.0 Baseline Summary 3
3.0 Commitments 6
4.0 Golf Resort Pre-Construction Phase 8
5.0 Golf Resort Construction Phase 9
6.0 Golf Resort Post-Construction (Habitat Management) Phase 11
7.0 Golf Resort Post-Construction (Golf Course Management) Phase 12
8.0 Golf Event / Tournament Phase 13
9.0 Residential Phase 15
References 16

DRAWINGS

G6741.04.001 – Proposed locations for the barn owl boxes and their requirements
G6741.04.002 - Proposed barn owl box specifications

Executive Summary

1. Barn owls are protected under Schedule 1 of the Wildlife and Countryside Act (W&CA) 1981 (as amended). This makes it an offence to intentionally or recklessly disturb an adult barn owl while it is nest-building or while it is at a nest containing eggs or young birds. It is also an offence to disturb dependent young barn owls.

2. There are two records of barn owl roosts within 1km of the proposed development site, and a barn owl breeding site was confirmed at Home Farm during the bat survey work. Barn owls have also been noted in flight during other development-related surveys at Lee Hall to the west.

3. Habitats within the proposed development site provide good foraging opportunities for barn owl, in terms of open grassland areas, although improved, grazed grassland is sub-optimal for small mammal prey species.

4. The purpose of this document is to minimise the potential adverse effects of the development and provide beneficial ecological effects for barn owls by embedded mitigation throughout all developmental stages.

5. In order to ensure protection of barn owls prior to and during demolition of the nest/roost site at Home Farm, a barn owl method statement will be drawn up and implemented under the supervision of an appropriately licenced ecologist.

6. Three tree mounted barn owl boxes will be installed prior to demolition to mitigate for the loss of the Home Farm barn owl nest/roost site.

7. Mitigation will include the creation of far rough and conservation grassland which will enhance the quality of barn owl prey carrying-capacity of these habitats.

8. The construction, operation and decommissioning of the Ryder Cup Tournament will coincide with the barn owl breeding season, during which barn owls may rear one or two broods. A separate Event and Travel Management Plan (ETMP) will be produced for the Ryder Cup Tournament.

9. The ETMP and LHMP will include measures to avoid, reduce and offset impacts on barn owls, as informed by an inspection of barn owl nest boxes in April prior to the Ryder Cup Tournament.

1.0 Vision Statement

1.1 Barn owls are protected under Schedule 1 of the Wildlife and Countryside Act (W&CA) 1981 (as amended). This makes it an offence to intentionally or recklessly disturb an adult barn owl while it is nest-building or while it is at a nest containing eggs or young birds. It is also an offence to disturb dependent young barn owls.

1.2 Barn owls are known to use the proposed development site for breeding, roosting and foraging.

1.3 The aim of the barn owl management strategy is to minimise the potential adverse effects of the development or provide beneficial ecological effects for barn owls by embedded mitigation throughout all developmental stages including:

1.4 The strategy will include measures to be implemented during the each developmental stage, as shown on the following plans:

- G6741.001 - Golf Resort Pre-Construction Phase;
- G6741.002 - Golf Resort Construction Phase;
- G6741.003 - Golf Resort Post-Construction (Habitat Management) Phase;
- G6741.004 - Golf Resort Post-Construction (Golf Course) Phase;
- G6741.005 - Golf Event / Tournament Phase; and
- G6741.006 - Residential Phase.

1.5 A Construction Environmental Management Plan (CEMP) will be provided pursuant to a planning condition of the permission for the Proposed Development. The CEMP will incorporate additional mitigation identified in the Environmental Statement (ES) and will also contain statutory measures.

2.0 Baseline Summary

Barn Owl Ecology and Legal Protection

Foraging

2.1 Barn owls are generally active within 3 to 6km of their former nest site during non-preferred breeding times (November to January inclusive). An assumption that the average maximum distance travelled in all directions is 4km gives a non-breeding home range of 5,000ha (50sq km). Whilst breeding, most birds confine their activity to that part of their home range (320 ha), which lies within 1-2km of the nest, although some birds forage up to 4km even when nesting (Barn Owl Trust, 2012).

Habitats

2.2 Barn owls are primarily birds of open-country and mainly hunt from the air, listening and looking for prey whilst flying. As specialist predators of small mammals in open habitats, barn owls tend to concentrate their foraging on those parts of their range where prey availability is greatest. Although at certain times of year prey can be captured in some cultivated and grazed fields, the best habitat for all-year-round prey abundance is permanent rough tussocky grassland with a deep litter-layer (Cayford 1992: Taylor 1994: Askew 2006, Barn Owl Trust, 2012).

Prey

2.3 Voles, shrews, mice and rats constituted between 85 and 98% of total prey identified in 145,373 pellets from Denmark, Germany, France, Spain, Italy, Britain and Ireland (Barn Owl Trust, 2012).

Breeding season

2.4 The vast majority of barn owl courtship begins in later winter/early spring, with eggs generally laid in April or May. The period from courtship to young birds dispersing is an average 139 days. Young disperse from the nest between August and October (Barn Owl Trust, 2012).

Roosting behaviour

2.5 Some pairs of barn owl will roost together at the nest all year round, although most only roost together during courtship and egg laying. Taylor (1994) during personal observations observed that most males had moved out soon after the clutch was complete and, by the time the young were fledging, most females had begun to roost elsewhere (Barn Owl Trust, 2012).

Territorial behaviour

2.6 The size of barn owl home ranges renders them physically impossible for a bird to defend. There is little evidence of territorial barn owl activity, indeed there has been visual observation of birds from different breeding pairs ignoring each other during foraging encounters. The only situation in which barn owls are known to show aggression towards other barn owls is when a male barn owl enters the occupied nest of another pair; female barn owls do not elicit the same response (Barn Owl Trust, 2012).

Mortality

2.7 Barn owls face a number of risks including consumption of poisoned prey, road mortality, starvation (caused by factors such as lack of good foraging habitat, seasonal reduction in small mammals), vulnerability to collisions with overhead wires, predation by foxes and raptors, electrocution from contact with un-insulated overhead cables, poor body insulation/heat loss in low temperatures, risk of drowning, inability to find a mate because of low population density, lack of suitable nest/roost sites, loss of nestlings because of proliferation of unsafe nesting places, increased frequency of extreme weather events (Barn Owl Trust, 2012).

Legal status

2.8 Barn owls are afforded protection against killing, injury or capture under the Wildlife and Countryside Act (1981), under Schedule 1 of which, offenders are liable to special penalties. Their nests and eggs are also protected.

2.9 Under Schedule 1 of the same Act (as amended) breeding barn owls are also afforded protection against reckless disturbance while at or near the nest and, for as long as they are dependent on the adults, recently fledged young are protected against reckless disturbance at all times wherever they are.

2.10 At any potential barn owl nest site where a potentially disturbing activity is planned, anyone who could reasonably be expected to know that barn owls might be nesting and who fails to check may be deemed reckless, and thereby guilty of an offence. The disturbance of barn owls is not necessarily related to noise, lighting, movement, vibration or the close proximity of a person. What disturbs barn owls is the unexpected (Barn Owl Trust, 2012).

2.11 There is no fixed distance within which a licence is needed to cause unavoidable disturbance, as every situation is different. To avoid committing an offence or requiring a licence during nest occupation, it is normal practice to avoid working in the same building or keeping 30m buffer from a tree nest. Within the 30m buffer zone potentially disturbing activities are avoided or minimised. If this is not possible, then a licence from Natural England may be required to enable disturbance to take place in a controlled manner, safeguarding the birds. (Ramsden & Ramsden, 2002)

2.12 A breeding or roosting site has no legal protection in itself but is protected from being disturbed while it is being prepared for nesting, while it contains breeding adults or dependent young.

The Hulton Park Site

2.13 Baseline data relating to barn owls at Hulton Park is set out below.

2.14 A desktop review of all existing relevant barn owl records and data was undertaken.

2.15 Data sources informing the desktop study include:

- Greater Manchester Ecology Unit (GMEU)
- Bolton Council Core Strategy Allocation Plan (Adopted December 2014)
- Multi-agency geographic information for the countryside (MAGIC) portal

- Persimmon Homes and Harcourt Development - Lee Hall, Westhoughton: Environmental Statement

2.16 As agreed with GMEU, observations of barn owl were recorded during nocturnal surveys for other species, with no specific barn owl surveys undertaken.

2.17 There are two records of barn owl roosts within 1km of the development site, and a barn owl breeding site was confirmed at Home Farm during the bat survey work. Barn owls have also been noted in flight during other development-related surveys at Lee Hall to the west.

2.18 Habitats within the proposed development site provide good foraging opportunities for barn owl, in terms of open grassland areas, although improved, grazed grassland is sub-optimal for small mammal prey species.

2.19 The site contains extensive areas of open grassland that is primarily improved grassland, with some large areas of semi-improved grassland and smaller areas of marshy grassland. There are two arable fields in the west of the Proposed Development site and one in the east, totalling just under 9ha.

2.20 The barn owl roost site at Home Farm will be demolished during the early stages of the project.

2.21 Barn owl is valued at the Local level. Although barn owl is a Schedule 1 species, it is not a priority species under the Greater Manchester Biodiversity Action Plan, so is not valued at County level.

3.0 Commitments

3.1 A summary of barn owl mitigation commitments included in the project are set out below.

ES Chapter 10 Ecology and Arboriculture

3.2 Much of the golf course will be restored to grassland after the extensive topographic remodelling that is required to construct the course.

3.3 The creation and management of new woodlands (increasing the length of woodland edge habitats), far rough and conservation grassland at Hulton Park will enhance the barn owl prey carrying-capacity of these habitats.

3.4 As a matter of legally embedded mitigation, to ensure protection of barn owls prior to and during the demolition of Home Farm, a barn owl method statement will be drawn up and implemented under the supervision of an appropriately licenced ecologist. This method statement will include Reasonable Avoidance Measures (RAMs) and will specify that demolition must occur outside the nesting period, deemed to be February to October inclusive.

3.5 Barn owl boxes will be installed prior to the demolition of Home Farm to mitigate against the loss of the Home Farm nest/ roost site. A scheme for protection of replacement units from adverse noise or lighting effects during construction and operation of the development will be also implemented.

3.6 A sensitive lighting strategy will be adopted, providing an unlit habitat for nocturnal barn owl foraging and will ensure barn owl boxes are not subject to light spillage.

3.7 A separate Event Travel Management Plan (ETMP) will be produced for the Ryder Cup Tournament, with specific mitigation for barn owls, including tool box talks to ensure awareness amongst site operatives of the presence of barn owls and their nest/roost sites, pre-commencement inspections and siting plan to ensure that temporary works avoid barn owl nests.

3.8 Crowd management measures will be implemented during the Ryder Cup Tournament to avoid disturbance of barn owl nest and roost sites.

Conservation Management Plan

<u>Natural landscape</u>

- To identify areas at the development site for the potential creation or enhancement of additional habitats.
- Carry out appropriate mitigation for the duration of the works for all legally protected species.

<u>The designed landscape (buildings and other structures)</u>

3.9 Works will consider the impact of the development on legally protected species.

Consultation Response to GMEU

3.10 Inconsistency over reference in the ES to the provision of barn owl boxes as mitigation will be resolved by the production of a figure identifying three locations for barn owl boxes. The barn owl boxes will be installed on trees at the edge of woodland blocks, away from lighting sources and overlooking open habitats.

4.0 Golf Resort Pre-Construction Phase

4.1 No changes to the current land-use are anticipated at Hulton Park within the pre-construction phase.

4.2 During the pre-construction phase, some preparatory woodland management activities, such as thinning or clearance of rhododendron *Rhododendron ponticum* and other invasive species will be undertaken.

4.3 Any works impacting the woodland edge will be carried out outside of the barn owl nesting season (deemed to be February to October inclusive). If this is unavoidable, any works will be preceded by an inspection by a suitably licenced ecologist. If an active barn owl nest is present then a fenced buffer of at least 30m from the canopy edge of the tree will need to be implemented during the nesting period.

4.4 Disturbance at the barn owl nest/ roost site at Home Farm will be avoided during the pre-construction phase. Any general maintenance or preparatory works undertaken within 30m of the barn owl nest/ roost site will be undertaken outside of the barn owl breeding season (deemed to be February to October inclusive).

5.0 Golf Resort Construction Phase

Barn Owl Roost/ Nest Site Mitigation

5.1 The main impact of the construction phase on barn owls will be the demolition of the nest/ roost site at Home Farm.

5.2 Three alternative nest/roost sites, in the form of tree barn owl boxes, will be installed six months in advance of the construction phase to mitigate for the loss of the Home Farm nest/roost site. The tree barn owl boxes will follow the standard Barn Owl Trust design (Barn Owl Trust, 2012). Indicative barn owl box locations are shown in drawing G6741.04.001 and specifications shown in drawing G6741.04.002.

5.3 The installed barn owl boxes will overlook open habitat, away from dense forest, disturbance and be at least 1km away from motorways or other fast non-screened main roads to avoid road deaths. The barn owl boxes will be erected at a height no less than 3m above ground level (Barn Owl Trust, 2012).

5.4 The barn owl boxes will be located at the edge of woodland blocks, away from lighting sources and installed on mature trees with thick trunks. The trees will have a high canopy with few or no low branches. It is important that the barn owl boxes face outwards over open habitat and do not face into the woodland, as the access hole must be visible to passing barn owls, even when the tree is in full leaf. The barn owl boxes must also be positioned to avoid prevailing weather. The barn owl boxes will also be located near to areas of rough grassland for foraging (Barn Owl Trust, 2012).

5.5 In preparation for the demolition of the building containing the barn owl nest/roost site at Home Farm there will be monthly monitoring (using webcam if appropriate) to check for presence of barn owls and evidence of breeding.

5.6 In order to ensure protection of barn owls prior to and during demolition of the nest/roost site at Home Farm, a barn owl method statement will be implemented under the supervision of an appropriately-licenced ecologist. This method statement will include Reasonable Avoidance Measures (RAMS) and demolition will take place outside of the barn owl breeding season (deemed to be February to October inclusive) or at a time when no nesting is occurring, as confirmed by an a pre-commencement inspection by an appropriately-licenced ecologist.

5.7 During the construction phase, there will be major earthworks re-landscaping throughout the site, including where the barn owl boxes are located. The increased disturbance may deter barn owls from using the barn owl boxes. To mitigate for this, no construction works shall take place within 50m of the new barn owl boxes during the first six months following installation.

5.8 A scheme will be implemented to protect barn the owl boxes from noise and lighting effects during the construction phase of the development. As the barn owl boxes will be installed at the edge of woodland blocks they will benefit from the lighting strategy (ES Volume 4: Appendix 3.2.), which will incorporate a 15m unlit buffer on retained woodland habitats to ensure they are not subject to light spillage.

5.9 Prior to any construction works in the vicinity of the barn owl boxes an inspection by a licenced ecologist will be carried out. Should barn owls be found to be nesting in a barn owl box then a fenced buffer of at least 30m from the canopy edge of the tree will need to be implemented during the nesting period (deemed to be February to October inclusive).

5.10 A maintenance, repair and monitoring schedule for the barn owl boxes will be produced and implemented under a barn owl method statement, which will form part of the CEMP. The construction phase monitoring scheme will demonstrate statutory compliance with wildlife protection requirements. The barn owl boxes will be inspected in November by an appropriately licenced ecologist, and cleaned for any residual nest material and debris. This inspection and cleaning of boxes will be done in situ without adjustment to position or orientation of the box, by removal of inspection panels. In the event the barn owl box is occupied, the box will be closed without cleaning and cleaning will be delayed until the following year.

Barn Owl Foraging Habitat Mitigation

5.11 Barn owls prefer to forage on permanent rough, tussocky grassland with a deep litter-layer.

5.12 Grassland across the site comprises 130ha improved, 36ha poor semi-improved, 1ha semi-improved and small fragments of marshy grassland and modified neutral grassland. The construction phase will result in the disturbance or loss of nearly all this resource. A total of 122ha will be disturbed and 47ha will be lost.

5.13 The main ecological provision, in terms of grassland will be the creation of far rough and conservation grassland, comprising a 70% grass and 30% wildflower mix, which will enhance the quality of barn owl prey carrying-capacity of these habitats.

5.14 The proposed lighting installation and luminaires will be designed to minimise light pollution to surrounding habitats and wildlife.

6.0 Golf Resort Post-Construction (Habitat Management) Phase

Barn Owl Roost/ Nest Site Mitigation

6.1 The barn owl boxes will be inspected annually in November by an appropriately licenced ecologist, and cleaned for any residual nest material and debris. The inspection and cleaning will be done in situ without adjustment to position or orientation of the box by removal of inspection panels. In the event the barn owl box is occupied, the box will be closed without cleaning and cleaning will be delayed until the following year.

6.2 A monitoring report will be produced no later than one month following each anniversary of the commencement of development describing the current barn owl nesting status. The report shall identify and specify any remedial measures that require implementation during the forthcoming year, and shall set out a programme for the implementation of any protection or remedial measures. The remedial measures shall be carried out in accordance with the approved specification and programme. The annual reports will be required until the completion of the project in 2040/41.

6.3 Human disturbance may impact future barn owl nests, either from recreational activity or anti-social behaviour. Measures will be put in place to prevent illegal unauthorised access to the barn owl nest sites and the barn owl boxes will be installed away from the main fairways and greens.

Barn Owl Foraging Habitat Management

6.4 The lighting strategy will ensure that existing and new lighting minimises impacts on nesting and foraging barn owls.

6.5 The diverse grassland habitats and increased length of woodland edge habitats are likely to significantly increase prey volumes, benefitting barn owl foraging therefore no other additional mitigation is required.

6.6 The conservation and far rough grassland will be managed by a twice yearly cut, in late February and early September, subject to suitable weather conditions.

7.0 Golf Resort Post-Construction (Golf Course Management) Phase

Barn Owl Roost/ Nest Site Mitigation

7.1 Human disturbance may impact future barn owl nests, either from recreational activity or anti-social behaviour. Measures will be put in place to prevent illegal unauthorised access to the barn owl nest sites and the barn owl boxes will be installed away from the main fairways and greens.

Barn Owl Foraging Habitat Management

7.2 The management of the golf course fairways and greens are unlikely to be of benefit to foraging barn owl but will be managed in accordance with other LHMP management strategies.

7.3 The Lighting Strategy will ensure that existing and new lighting minimises impacts on habitats with potential for nesting and foraging barn owls.

8.0 Golf Event / Tournament Phase

8.1 The Ryder Cup Tournament is typically held in September and runs over a period of five days.

8.2 The barn owl breeding season is deemed to be February to October inclusive, during which barn owls may rear one or two broods. The construction, operational and decommissioning stages of the event may have an impact on barn owls if they are found to be breeding at the site.

8.3 A separate Event and Travel Management Plan (ETMP) will be produced for the Ryder Cup Tournament. The ETMP will include measures to avoid, reduce and offset impacts on barn owls, as informed by a pre-construction nest inspection undertaken by an appropriately licenced ecologist.

8.4 The event host facilities will result in the temporary reduction of barn owl foraging habitat, although all grasslands will be restored post event.

8.5 Tool box talks will be given prior to event construction to ensure awareness amongst site operatives of the presence of barn owls at the site and associated sensitivities.

8.6 The construction of temporary host facilities is anticipated to take 100 to 120 days, commencing approximately in April. Construction activities across the site will be phased throughout this period, with a separate barn owl inspection undertaken by an appropriately licenced ecologist prior to each phase of the event construction. A siting plan will be designed to ensure that any temporary works associated with the event avoid the installed barn owl boxes and other features that support occupied barn owl nests.

8.7 Following the inspections, should barn owls be found to be nesting in any nest box or other location, then a fenced buffer of at least 30m from the canopy edge of the tree will need to be implemented during the nesting period (deemed to be February to October inclusive).

8.8 Prior to the operational phase of the Ryder Cup Tournament, which is usually held in September, a further barn owl inspection will be carried out by an appropriately licenced ecologist, focusing on the barn owl boxes, woodland edges and mature trees adjacent to open habitats. Should barn owls be found to be nesting in any nest box or other location, then a fenced buffer of at least 30m from the canopy edge of the tree will need to be implemented during the nesting period (deemed to be February to October inclusive).

8.9 During the event, crowd management measures will be implemented to avoid the disturbance of nesting barn owls.

8.10 Decommissioning following the Ryder Cup Tournament will take approximately 42 to 84 days, i.e. Event activity will be completed by October at earliest, possibly extending into early December, during which time deconstruction activities will be phased across the site.

8.11 The decommissioning stage for the Ryder Cup Tournament would not introduce any additional disturbance risk for barn owl over and beyond those which have already been described above for the construction and operational stages.

.

9.0 Residential Phase

Barn Owl Roost/ Nest Site Mitigation Measures

9.1 There are no known barn owl nest/roost sites in the areas of the site intended for residential development. The three barn owl boxes will also be installed outside of the proposed residential land.

9.2 The initial clearance of the proposed residential land should ideally take place outside of the barn owl breeding season. If this timing is not possible, a nesting bird inspection will need to be conducted. If barn owls are found to be nesting within this area then a fenced buffer of at least 30m from the canopy edge of the tree will need to be implemented during the nesting period, with the associated clearance being undertaken outside of the barn owl breeding season (deemed to be February to October inclusive).

9.3 A monitoring report will be produced no later than one month following each anniversary of the commencement of development, describing the current barn owl nesting status. The report shall identify and specify any remedial measures that require implementation during the forthcoming year, and shall set out a programme for the implementation of any protection or remedial measures. The remedial measures shall be carried out in accordance with the approved specification and programme. The annual reports will be required until the completion of the project in 2040/41.

9.4 Human disturbance may impact upon future barn owl nests, either due to recreational activity or due to anti-social behaviour. Measures will be put in place to prevent illegal unauthorised access to the barn owl nest sites and the barn owl boxes will be installed at least 30m away from residential areas.

Barn Owl Foraging Habitat Management

9.5 The Lighting Strategy will remain in force and lighting design and location will be minimise impacts on habitats with potential for nesting and foraging barn owls.

9.6 Barn owl will continue to benefit from the management of grassland habitats at the site.

References

Askew, N.P. (2006) Barn Owl *Tyto alba* conservation in Britain; identifying priority conservation areas. PhD thesis, University of York.

Barn Owl Trust, (2012) The Barn Owl Conservation Handbook, Pelagic Publishing, Exeter

Cayford, J. (1992) Barn Owl ecology on East Anglian farmland. RSPB Conservation Review 6:45-50

Ramsden, D. and Ramsden, F. (2002) Barn Owls on Site: a guide for developers and planners. Ashburton, Devon. The Barn Owl Trust (updated from 1995 guidance)

Taylor, I. (1994) Barn Owls: Predator-Prey Relationships and Conservation. Cambridge: Cambridge University Press.

DRAWINGS

G6741.04.001 – Proposed locations for the barn owl boxes and their requirements
G6741.04.002 - Proposed barn owl box specifications

KEY

- Full Planning Application Boundary
- Outline Planning Application Boundary
- Barn Owl Box Location
- New Waterbody
- Retained Waterbody
- New Woodland
- Rough Grassland
- Far Rough Grassland
- Retained Grassland
- Retained Woodland
- Footpath
- Building
- Private Property

Criteria for Barn Owl Boxes:

- The barn owl boxes will be erected at a height no less than 3m above ground level
- Located at least 1km away from motorways or other fast non-screened main roads
- Facing outwards at the edge of woodland blocks and overlooking open habitats.
- Away from lighting sources and installed on mature trees with thick trunks, a high canopy with few or no low branches.
- Avoiding prevailing weather.
- Near to areas of rough grassland for foraging.

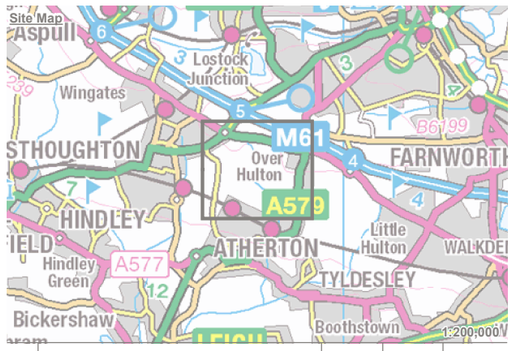

Rev	Description	Drawn	Approved	Date

THE ENVIRONMENT PARTNERSHIP

Genesis Centre, Birchwood Science Park, Warrington WA3 7BH
Tel 01925 844004 e-mail tep@tep.uk.com www.tep.uk.com

Project
Hulton Park, Barn Owl Management Strategy

Title
Proposed Locations for the Barn Owl Boxes and their Requirements

Drawing Number
G6471.04.001

Drawn	Checked	Approved	Scale	Date
MK	LJ	DS	1:9,000 @ A3	10/01/2018

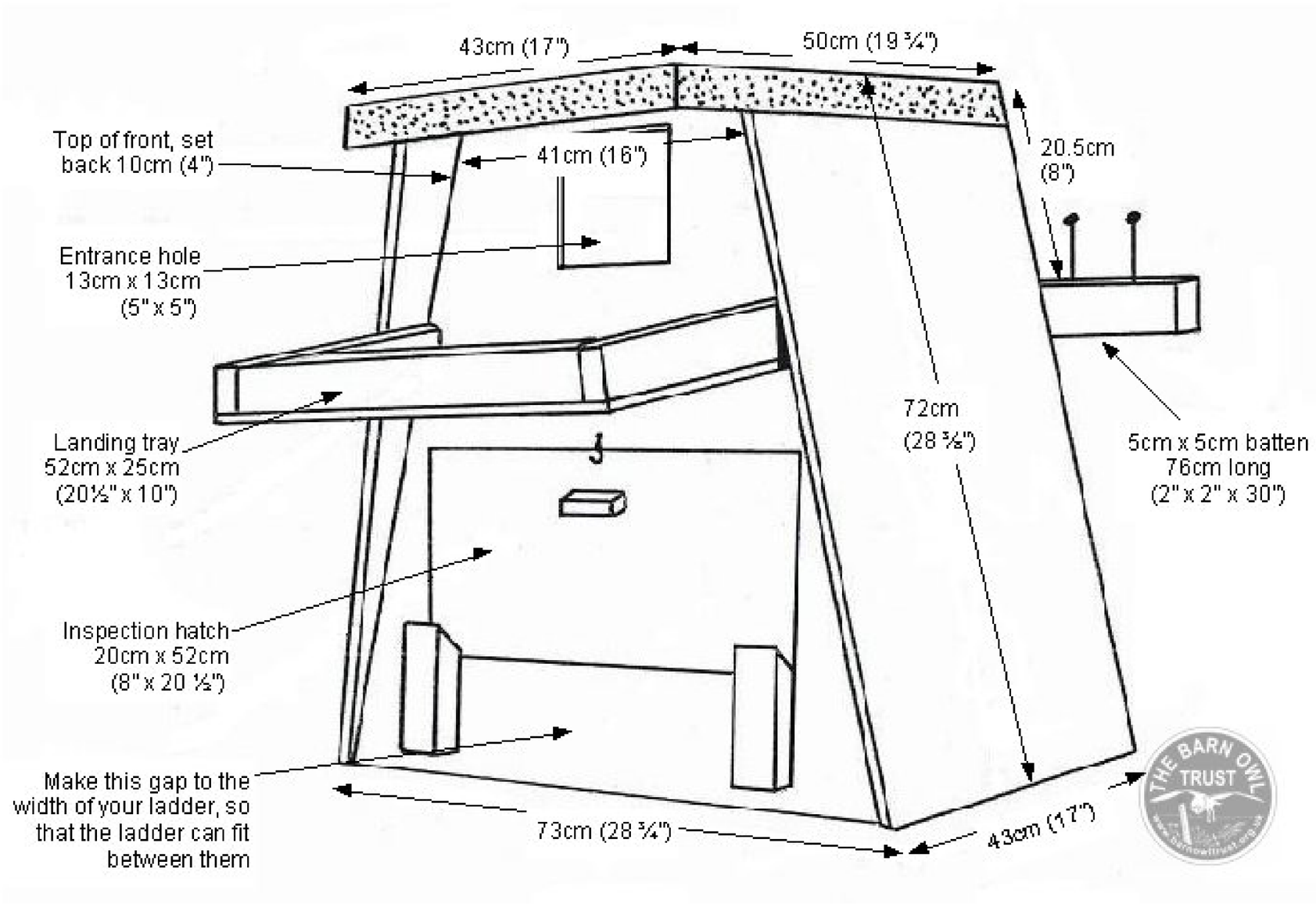

Criteria for Barn Owl Boxes:

- The barn owl boxes will be erected at a height no less than 3m above ground level
- Located at least 1km away from motorways or other fast non-screened main roads
- Facing outwards at the edge of woodland blocks and overlooking open habitats.
- Away from lighting sources and installed on mature trees with thick trunks, a high canopy with few or no low branches.
- Avoiding prevailing weather.
- Near to areas of rough grassland for foraging.

This map contains data from the following sources:

- The Barn Owl Trust
- OS OpenData

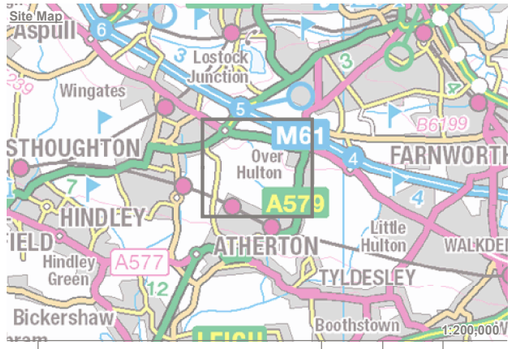

Rev	Description	Drawn	Approved	Date

THE ENVIRONMENT PARTNERSHIP

Genesis Centre, Birchwood Science Park, Warrington WA3 7BH
Tel 01925 844004 e-mail tep@tep.uk.com www.tep.uk.com

Project
Hulton Park, Barn Owl Management Strategy

Title
Proposed Barn Owl Box Specifications

Drawing Number
G6471.04.002

Drawn	Checked	Approved	Scale	Date
JS	LJ	DS	NTS @ A3	10/01/2018

THE ENVIRONMENT PARTNERSHIP

HEAD OFFICE

Genesis Centre,
Birchwood Science Park,
Warrington
WA3 7BH

Tel: 01925 844004
E-mail: tep@tep.uk.com

MARKET HARBOROUGH

No. 1 The Chambers,
Bowden Business Village,
Market Harborough,
Leicestershire,
LE16 7SA

Tel: 01858 383120
E-mail: mh@tep.uk.com

GATESHEAD

Office 26, Gateshead
International Business
Centre,
Mulgrave Terrace,
Gateshead
NE8 1AN

Tel: 0191 605 3340
E-mail: gateshead@tep.uk.com

LONDON

8 Trinity Street,
London,
SE1 1DB

Tel: 020 3096 6050
E-mail: london@tep.uk.com

CORNWALL

4 Park Noweth,
Churchtown,
Cury,
Helston
Cornwall
TR12 7BW

Tel: 01326 240081
E-mail: cornwall@tep.uk.com